ResearchGate

See discussions, stats, and author profiles for this publication at: https://www.researchgate.net/publication/302571013

The Vibration Monitoring Methods and Signal Processing Techniques for Structural Health Monitoring: A Review

Article *in* Archives of Computational Methods in Engineering · March 2015

DOI: 10.1007/s11831-015-9145-0

CITATIONS
68

READS
2,352

2 authors:

Deepam Goyal
National Institute of Technical Teachers' Training & Research, Chandigarh
27 PUBLICATIONS **184** CITATIONS

SEE PROFILE

Bs Pabla
National Institute of Technical Teachers Training and Research Chandigarh
66 PUBLICATIONS **425** CITATIONS

SEE PROFILE

Some of the authors of this publication are also working on these related projects:

Project M Tech thesis View project

Project Performance enhancement of carbide tools in machining of Ti6Al4V alloy View project

All content following this page was uploaded by Deepam Goyal on 23 September 2016.

The user has requested enhancement of the downloaded file.

Arch Computat Methods Eng
DOI 10.1007/s11831-015-9145-0

ORIGINAL PAPER

The Vibration Monitoring Methods and Signal Processing Techniques for Structural Health Monitoring: A Review

D. Goyal[1] · B. S. Pabla[1]

Received: 1 March 2015 / Accepted: 5 March 2015
© CIMNE, Barcelona, Spain 2015

Abstract Machines without vibrations in the working environment are something non-existent. During machining operations, these vibrations are directly linked to problems in systems having rotating or reciprocating parts, such as bearings, engines, gear boxes, shafts, turbines and motors. Vibration analysis has proved to be a measure for any cause of inaccuracy in manufacturing processes and components or any maintenance decisions related to the machine. The non-contact measurement of vibration signal is very important for reliable structural health monitoring for quality assurance, optimizing profitability of products and services, to enhance manufacturing productivity and to reduce regular periodic inspections. This paper presents a state-of-the-art review of recent vibration monitoring methods and signal processing techniques for structural health monitoring in manufacturing operations. These methods and techniques are used as a tool to acquire, visualize and analyse the sampled data collected in any machining operation which can then be used for decision making about maintenance strategies.

1 Introduction

Mechanical systems with reciprocating or rotating parts create vibrations due to mechanical disturbances from various sources such as engine, sound, noise, etc. In mechanical engineering, the term "vibration" is often reserved for systems that can undergo an oscillatory motion freely without applied forces. Vibration is one of the characteristics of mechanical machinery that if uncontrolled, can cause minor or serious performance, operational or safety problems. Machine vibration being a key element for structural health monitoring (SHM) so there is massive interest in acquiring, analyzing and quantifying this parameter for improving reliability, life, quality control, productivity and safety against catastrophic failure. Although there are various causes of vibrations, but about 90 % of all problems arise due to unbalancing or misaligning of rotating parts [1]. Vibration can be characterized in terms of three parameters: amplitude, velocity and acceleration. The sensitivity of sensors used for measuring these parameters varies with the frequency of the vibration. The general selection guideline is to use amplitude sensors to pick up low frequency signals, velocity sensors in the middle ranges, and accelerometers at higher frequencies [2]. Machine tool structural components, such as gateways, bearings and ball screws are liable to deterioration in their performance level with respect to time due to gradual wear and tear, ageing, unbalance, looseness of parts, etc. On a regular basis, the testing of such components is needed to reduce the risk of failures and machinery breakdown. The present global market competition has attracted the attention of manufacturing industries towards the monitoring of manufacturing processes and equipment conditions to become a leaner. As cited by Meher-Homji [3], a major re-insurance company reported that blade failures had the highest percent of the failures in gas turbines (42 % of the total failures in gas turbines). Vibration monitoring has become an important technique in mechanical structural product's research, design, produce, apply and maintenance [4].

✉ D. Goyal
bkdeepamgoyal@outlook.com

[1] Department of Mechanical Engineering, NITTTR, Chandigarh 160019, India

Published online: 10 March 2015

2 Vibrations as a Diagnostics Tool

Diagnosis is the art of identifying machine condition from its signs or symptoms to determine its "cause and effect". It is usually used for monitoring, detection and analysis of machine condition during an operation. Vibration signatures of the machine can offer an early warning to the operator for time based maintenance or to make a crucial decision before any serious problem or unscheduled downtime. The amplitude of the vibration signature gives an indication of the severity of the problem, whilst the frequency can indicate the source of the defect [5]. The extraction of these signals can be considered as a valuable diagnostic tool to predict run-up failures of the machine components. It is a very challenging task to extract the feature from the acquired signal as interferences are occurred due to the presence of noise. It arises a need for developing a processing and analysis system of high level data to provide veracious extraction of data about the health of the machine. Various feature extraction techniques like statistical domain, frequency domain, time domain and time–frequency domain are used for obtaining diagnostic information.

Vibration analysis is a very powerful and reliable technique for monitoring the operating conditions of the machine. It is becoming more famous and familiar in industry due to non-destructive in nature and allows sustainable monitoring without any interfering in the process.

3 Structural Health Monitoring (SHM)

The environment of machining operations changes unpredictably and implementing a well consulted SHM is in dire need to heighten structural safety, reduce maintenance cost and avoiding human and economic losses. SHM is a continuous and an autonomous tool for measuring the various parameters (i.e. vibration, performance, bearing temperature, etc.) to diagnose the real time condition of the distinct components of the structural and mechanical systems which is very useful for improving structural models. SHM can be classified as online and offline. In the long term, SHM provides current information from time to time about the machine's ability to perform the intended operations in light of unavoidable failures and degradation from the working place. The SHM [6] consists of three steps, i.e. signal monitoring, signal processing, and data interpretation used in damage identification system as shown in Fig. 1.

Signal processing techniques includes statistical time series models, Fourier transform, short time Fourier transform, Cohen's class, wavelet transform, Hilbert–Huang transform whereas data interpretation includes artificial neural networks, fuzzy logic, support vector machine, Bayesian classifiers,

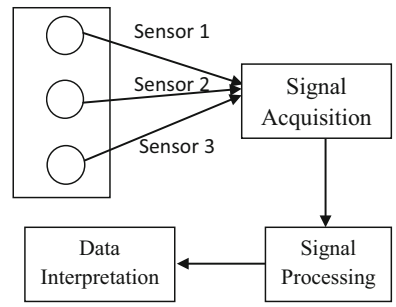

Fig. 1 Various steps in structural health monitoring

Hybrid classifiers. SHM is also categorized into local and global methods analogous to perform a human health checkup [7]. This classification is commonly established on the relation of the wavelength of the experimented signals with respect to the defect size as well as to the whole structure dimensions. SHM technology can also contribute to intelligent aircraft structures for reducing its weight and maintenance [8]. They showed that SHM is the imitation of human nervous system. A popular approach to SHM is modal parameters (natural frequencies, mode shapes, mode shape curvatures, flexibility, and changes in strain energy distributions etc.) which are functions of the physical properties of the structure. So, any alterations in these properties (mass, stiffness, damping) due to boundary conditions, damage, or other internal defects cause variations in modal parameters of the structure. *Natural frequencies* are most widely used parameters in vibration based SHM, but alterations in these frequencies are not much valuable to determine the damages if not very accurate measurements are acquired or large levels of damage have appeared [9]. The up-gradation in sensor technology for vibration measurement is required to minimize the drawbacks of *mode shape parameters* that they require a single excitation point and a roving exciter for their measurement [10]. The changes in the *mode shape curvatures* are more suitable than mode shape variations for locating damage and also, highly localized and sensitive to the region of damage [11]. The vibration-based SHM has become a significant and fast growing research domain in different fields such as mechanical engineering, aeronautics and civil engineering to assess the real time dynamic characteristics of the machine. A crack may be undetectable at early stages by visual inspection technique because it doesn't make changes in properties of the adjacent material, but change in geometry with respect to normal state. Although current observations, such as, visual inspection, non-destructive techniques for stress corrosion and fatigue cracks are performed in the US Navy's P-3 Orion aircraft [12], but a fatigue life enhancement program has been employed to prolong its life for 10 years. It is estimated that nearly half of all operating costs of machining operations can be assigned to repair and maintenance. This is also an ample

motivation to study the unmanned SHM that makes the manufacturing industries to operate at low cost with greater customer satisfaction. It is anticipated that an accurate and reliable SHM systems could result in an increase in cutting speeds, reduction in downtime and an overall increase in savings between 10 and 40 % [13]. The basic objective of SHM is to determine the location, size, existence and type of damage, and prognosis. In general, a SHM system is used for fault detection, breakdown anticipation and problem diagnostics in the machine. A *bathtub curve* describes the life of a machine [14] as vibration levels are used to indicate the failure of a machine. Sometimes, the deterioration in machine takes place so rapidly that there is hardly any gap between fault detection and total failure [15]. In such cases continuous or real time monitoring with automatic shutdown is needed.

3.1 Method of Structural Health Monitoring

The SHM methods can be divided into two types: model based and feature based methods [16].

Model-based methods also called failure detection methods involve finding a model in which monitoring is carried out by either the variations in model parameters, such as damping ratio or predict errors in the model outputs to reveal defects. These methods correlate the observational signatures of abnormal structures with analytical or quantitative models to detect the damage parameters, and also need a precise computational model. Various models such as autoregressive and moving average (ARMA) model, hidden Markov model (HMM), artificial neural network (ANN) etc. are falling into this category.

Feature-based methods are performed in two steps, one is feature extraction from the signal and another is the decision-making based on these features. Various features can be used, including

(a) Time-domain features (such as mean, standard deviation, range, root mean squares, skewness, kurtosis, crest factor, etc.);
(b) Frequency-domain features (such as frequencies, damping ratios, energy in different frequency bands, etc.);
(c) Spatial domain features;
(d) Time–frequency domain features (i.e. time–frequency distribution);

The above signal processing methods will be discussed in Sect. 5 of this paper.

4 Vibration Measuring Methods

Vibration measurement is an effective, reliable and non-intrusive technique to monitor the condition of the machine during startups, shutdowns and normal operations [17]. Vibration sensors are considered as the heart of modern computerized SHM systems. The selection of appropriate sensors is needed not only to acquire a precise signal, but also have a capability of interpreting what the signal means to improve confidence in sensor based monitoring technology. The cutting forces and vibration are the most widely used measurement parameters [18]. However, there is a great difficulty in detecting tool faults due to the dynamics of the cutting forces. The International Standards Organization (ISO) establishes universally acceptable metric units for machinery vibration. Figure 2 shows the basic features of the vibration measurement scheme [14]. A vibration sensor detects the vibration parameter from a vibrating body through its mechanical structure and converts these vibration signals to equivalent electrical signal. This output signal is then analyzed by various signal processing and feature extraction techniques to measure the various characteristics of vibration such as amplitude, frequency, displacement, velocity, acceleration, phase and period.

In drilling, the direct measurements aren't very efficient in economical and technical terms [19]. He placed the various methods applied to condition monitoring that indirectly measure sudden failure and tool wear into three groups. The dynamic forces in a vibratory system depend on the displacement, velocity and acceleration components of a system. The analysis of dynamic system to base excitation to understand the operating principle of vibration instrument is described [20].

Vibration pickup The integration of the contact type transducer and another device to measure vibrations is called a vibration pickup. A seismic instrument, commonly used vibration pickup, consists of a mass–spring–damper system mounted on the vibration. The various vibration transducers used are:

1. Displacement transducers (Vibrometer/proximity probes)
2. Velocity transducers (Velometer)
3. Accelerometers
4. Laser Doppler Vibrometers

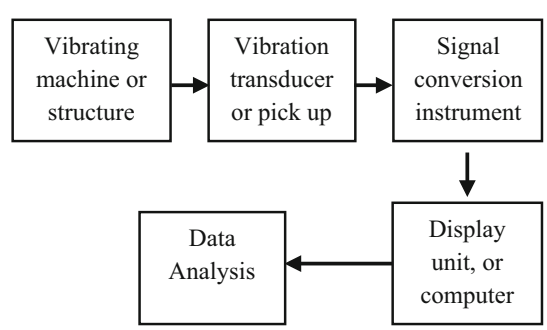

Fig. 2 Basic principle of vibration measurement

Displacement transducers measure relative displacement, whereas the most widely used to measure absolute motion are velocity and accelerometers [21].

4.1 Displacement Transducers

These are quite complex systems having a limited value in the study of mechanical vibrations. These are useful in low frequency vibration (below 10 Hz) measurements or if there is small annual radial clearance gap between machine elements. These are generally preferred for journal bearing equipped rotating machinery for shaft vibration measurement.

4.1.1 Eddy Current Proximity Sensor

It is widely used non-contact sensor works on the electromagnetic induction principle that change in the resistance of the material due to gap changes. It consists of a coil, an oscillator, a detector and a triggering circuit [22]. When there is a metal object in close proximity, the electromagnetic field in the coil induces eddy currents in non-magnetic but conductive materials [23]. These are used to measure blade condition in a gas turbine engine [24]. The prognostics and health management for jet engines and other turbomachinery are also described by eddy current sensing [25]. Two proximity probes can be used to obtain "orbit plot" or "Lissajous figures" of shaft motion in journal bearings [15].

4.1.2 Inductive Proximity Switch

These sensors can only be used for the detection of metal objects and is best suited with ferrous metals. It consists of a coil wound around a core, an oscillator, detection circuit and output circuit. The magnetic field is generated by passing an alternating current through the coil, when a metal object comes closer to the coil end, the inductance of the coil changes. This change is continuously monitored by an L–C oscillator circuit. This circuit further triggers a switch to change in preset value of inductance. It is considered an optimum measurement method for rotor-to-stator position [26].

4.1.3 Capacitive Sensors

It is non-contact type sensor works on principle of measuring the electrical capacitance of the gap between the plates. These sensors can also be used as proximity sensors, consists of a single capacitor plate probe with the object as the other plate, which has to be metallic and earthed. These are allowed for dynamic measurement in a surface force apparatus within the range of 0–100 Hz [27]. The vibration amplitude of turbomachinery blade has also been measured through tip timing with capacitance probe sensor [28]. Capacitive sensors are well suited for high precision, high resolution, dynamic and non-contact measurements. These sensors have disadvantages of high output impedance, high sensitivity to material variations or contaminants within the clearance, low grade anti-jamming ability, and its measure is vulnerable to electrical medium and electromagnetic fields [29].

4.2 Velocity Transducers

These transducers are used for vibration measurements within the frequency range of 10–1000 Hz and balancing operations on rotating machinery. These transducers work on the principle of electromagnetic induction. These are self-generating and needs no external device for its operation. These are sensitive to lateral vibration so the sensor should be mounted in such a way that surface is straight and slightly larger than the base. It has the advantages of cost-effectiveness, quite sensitivity, simple post-processing circuit, a large output signal which is linearly proportional to velocity, negligible maintenance and powerful anti-interference ability; also the disadvantage is that they are susceptible to shocks, relatively complex and large structure [30].

Laser velocimeters are a modern type of velocity transducers that operates on the principle of the Doppler Effect. Due to its expensiveness, these are not commonly used in diagnostics.

4.3 Accelerometer

Accelerometers are electromechanical transducers designed for measuring vibratory acceleration. Its principle is based on the piezoelectric effect that the force caused by vibration causes the mass to 'squeeze' the piezoelectric materials which produces an electrical charge that is proportional to the force exerted upon it. The different designs of an accelerometer are '*compression type*' and '*shear type*'. In general the shear configuration gives the best all-round results for general purpose accelerometers and the compression design is used for particular applications [31]. These are employed to measure the vertical vibrations for tool wear monitoring of turning operations [32]. A Kistler mini accelerometer is used to monitor the online condition of metal cutting tool, and to estimate the flank wear area in inserts for CNC turning [33, 34]. The main advantages of the piezoelectric accelerometer include, light weight and high frequency range, compactness, ruggedness and high sensitivity [35]; the disadvantages are that these have a high output impedance that generate small voltages (order of 1 mV), vulnerable to interference from the external environment, the weak output signal which requires amplification through the amplifier circuit and detection by detecting circuit [36].

4.4 Laser Doppler Vibrometers (LDV)

The LDV is an interferometric device which measures the absolute velocity of a vibrating body through the measurement of the Doppler shift of scattered laser light coming from the target. It works on laser Doppler principle, in which a frequency-modulated coherent laser beam is reflected from a vibrating surface, and Doppler shift, f_{shift} of the reflected beam is compared with the reference beam, f_{ref}. A Doppler signal processor demodulates the photo detector signal, which generates a time resolved velocity of the vibrating body [37]. These techniques are capable of high accuracy and sensitivity, and considered to be a unique instrument for repeatable vibration measurements to overcome the various problems, such as frequency response, intrusivity etc. These instruments are used for modal analysis measurement are used for modal analysis measurement, high temperature surfaces and noisy environments or to analyze the small and weal structures [21, 38]. Laser Doppler Vibrometer is used for observing changes in mode shapes and natural frequencies for various types of damages such as cut-out, impact and delamination in graphite–epoxy composite beams [38]. The result is virtually independent of the transmitter/receiver motion due to the occurrence of the frequency shift at reflection so it measures the absolute rather than relative velocity.

These Vibrometers requires less data storage and processing as compared with a full field measuring instruments like real time and time-average holography. The disadvantages include "speckle drop out" (the speckle noise can distort LDV signal), line of sight required from the laser head to the target, the time required for testing and demodulation of data [39]. The improvements in speckle noise interference would be necessary for a successful application to actual field structures [40]. This technique has a great advantage that the measurement point can be changed easily and quickly by deflecting the laser beam without loading the target object. These have a very limited application in SHM due to its expensiveness. At present, due to its bulkiness and non-portability, these are unsuitable for intermittent monitoring [21].

In future, Vibrometers could be developed into a hard hat, and the operator would just have to look in the machine direction, utter the ID of the machine into a microphone, and the laser and imaging system would locate the machine and take measurements at a prescribed number of monitoring points on it. Currently, however, they are not really a viable option for regular condition monitoring, even though they are used in production quality control measurements [41].

5 Signal Processing and Feature Extraction Techniques

The extraction of features using signal processing is considered as one of the major elements and challenging aspect of vibration based machine condition monitoring (MCM). The aim is to accentuate features from the sensed signals, which are usually noisy and complex and have to be further processed to yield the features of our interest. The selection of the signal processing method is paramount to effectively identify and diagnose defects that are indicative of potential machine failure. Due to the complex processes involved in the structural response to dynamic loading, a significant research effort has been applied to health monitoring of a machine with the emergence of a broad range of methods, techniques and algorithms. The various methods based on level of identification are classified to extract the features for obtaining the current health of a machine [42, 43].

Level 1: To determine the presence of damage in structure
Level 2: To determine the geometric location of the damage
Level 3: To quantify the severity of the damage
Level 4: To predict the remaining service life of the structure
Level 5: Self healing structures

Park et al. [43] suggests 'level 5' in the context of smart structures with emergence of shape memory alloys i.e. Cu–Al–Ni and Ni–Ti (NiTi) alloys. The ultimate aim of SHM is to predict the remaining service life of the damage. Too much noise in the vibration signals makes impossible to extract the useful information through signal processing techniques so adaptive noise cancellation (ANC) is one such technique that enhances the signal to noise ratio [44]. The various vibration transducers like accelerometer etc. measures raw data obtained from the structure in time domain. Although, the time domain analysis is direct and provide useful information, but has a limitation that it doesn't provide clear information about all the frequencies present in the response of the structure. Fast Fourier transform (FFT), a real time analysis is in dire need to perform quick transformations of functions from time domain to frequency domain or vice versa. The further analysis is often undertaken to obtain modal domain data from the frequency domain data. Now, modern techniques are also available to directly convert the time domain data to modal domain data [45]. During the conversion between the domains, some compression of the data takes place, but for linear systems, there is a little loss of information between the time and frequency domains [46]. Currently, signal processing methods based on modal domain are widely discussed in the literature because mode shapes,

modal damping factors and natural frequencies are easily interpreted than features extracted from the time domain (e.g. residuals of autoregressive model) and frequency domain (e.g. the distortion identification functions) [11].

Obviously, there are no universal physical variables and signal processing techniques that would be appropriate for all applications and also, it is not practically possible to express all signal processing methods for various applications [47]. To keep it general, this section summarizes the most common ones in chronological order:

5.1 Statistical Time Series Models

The earliest used models in SHM are time series (TS) models which are developed as an approximate mathematical model based on a set of input–output measurements. They are classified into two categories, first, the linear statistical TS model (e.g. autoregressive model, moving-average model, autoregressive moving average etc.) and second, the non-linear statistical TS models (e.g. non-linear autoregressive with exogenous inputs, non-linear autoregressive moving average with exogenous inputs) [48]. In 1951, Peter Whittle introduced the general ARMA model which is considered as a time series model based condition monitoring technique carried out by either the variations in model parameters, such as damping ratio or predict errors in the model outputs to reveal defects. The time series analysis of vibration signals was used to diagnose the damages in mechanical structures [49]. These are among the most utilized methods for parametric representations of a signal and condition assessment of structures under dynamic loading. The time series analysis of acoustic emission is also performed to monitor the wear of cutting tool [50]. It is employed to extract the wear sensitive features for the estimation of tool major flank wear in a turning process and establish the direct relation to the natural frequency of the tool/holder set by developing a metric calculated based eigen value system [51]. It provides a measure of the wear accelerating stage and the region using eigenvalues and dispersion ratios. ARMA is successfully accepted to analyze and forecast the rotate speed signal of aero-engine and also to predict the value transformation trend of signal [52]. ARMA can't model noise contaminated measured structural response and can't model problems like non-linear behavior of civil structures [6]. Hence, Statistical non-linear TS models have been proposed to overcome the statistical linear TS models.

5.2 Probability Distribution and Density Function

It is a way of characterizing random signal to distribute the value at any arbitrarily chosen time. It can be expressed in 'probability distribution' i.e. the probability of its variable is less than or equal to a specified value [53]. The probability function is a non-decreasing function, lies between 0 and 1. Its variation with variable is described in [20]. The probability density function (PDF) is used to obtain the different statistical parameters of a signal by taking various moments for mean value, $\bar{x}$:

$$\bar{x} = \int_{-\infty}^{\infty} xp(x)dx \tag{1}$$

The First moment defines the '*center of gravity*', which occurs when the area under the curve is unity from Eq. (1). Second moment defines the variance about the mean value, corresponds to the '*moment of inertia*'. The third moment defines the '*skewness*' (S), which is zero for symmetrical functions and large for asymmetrical functions. Fourth moment defines '*kurtosis*' (K) that measures spiky or impulsive signals. The statistical parameter 'kurtosis' is used for predicting the condition of rolling element bearing by measuring the bearing housing vibration [54].

5.3 Fast Fourier Transform (FFT)

During the vibration transmissions, the vibration produced by a machine component consists of certain frequencies don't change, although their levels may change from one location to another. Frequency analysis of the vibration signal is widely used to diagnose the machine faults [16]. Fourier transform (FT), a frequency domain representation that estimates the strength of different frequency components (the power spectrum) of a time-domain signal. The forward FT is used to convert the signal from time to frequency domain, and an inverse FT is used to convert from frequency to time domain. FFT is considered as more effective and efficient diagnosis technique to obtain the Fourier Transform of discretized time signals. This signal is considered for a finite time called the "frame" or "time window", which is then digitized and stored for feature extraction. The selection of an appropriate sampling rate is important for signal digitization to avoid false frequency components that take place due to aliasing [15]. As per *Nyquist theorem*, the sampling frequency should be at least twice the maximum frequency present in the signal. FFT has been used in various types of structures to detect damage in pipes, scaled bridge model made of three steel girders subjected to impact test, identification of a 3D truss-type structure subjected to earthquakes and forced excitation [55–57].

In a real environment, the majority of the signals is non-stationary, i.e. spectra varies with time. During the working mode, machines generate the vibrations, which has a different frequency at each instant of time has a distinct frequency [58]. The FFT has significant limitations that it can't depict the change in frequency signals (vibration,

speech or biomedical signals) content over the time, also can't be used for monitoring real structures subjected to dynamic excitations [48]. So the joint time–frequency analysis technique is used to characterize a signal simultaneously into a two-dimensional representation (time vs. frequency) by comparing them with elementary functions such as the frequency modulated Gaussian functions [59]. The major difference between each time–frequency method is to handle the problem of uncertainty. The uncertainty principle states that "one can't simultaneously have good frequency resolution and good time resolution" [60]. To overcome the time information loss problem of FFT, three signal processing techniques is described in the following sections: short-time Fourier transform (STFT); Wigner–Ville distribution (WVD), and wavelet transform (WT).

5.4 Short-Time Fourier Transform

This technique is introduced to overcome the problems of FFT called a STFT, which is an extension of FFT capability of analyzing non-stationary or noisy signals. The basic idea is to divide the initial signal into small time windows and apply the Fourier transform to each time segment for representing the variation in signal frequency content over time that existed in that segment. It has been used in various applications for e.g. to estimate the modal parameters of a 3D truss-type structures, 7-story RC frame, 3-story 3D steel frame and beams [55, 61–63]. It provides constant absolute bandwidth analysis to identify harmonic components and offers constant resolution in two-dimensional representation, irrespective of the actual frequency [64]. The size of the window determines the accuracy of time, larger the window the poor time resolution, better frequency resolution and vice versa.

The STFT has a limitation of low-resolution problem. This problem is resulted choosing a small window, which doesn't permit the dynamic transient behavior of the structure adequately. Also, it doesn't allow observing two closed natural frequencies [65].

5.5 Cohen's Class

The WVD is one of the most general time–frequency analysis techniques, seems to violate the uncertainty principle to provide excellent resolution for accurate examination in both domains, which leads to use this method for monitoring the nonlinear behavior of civil structure. In 1932, Eugene Wigner developed the original Wigner distribution to study the problem of statistical equilibrium in quantum mechanics. After 15 years, Jean Ville modified the Wigner distribution and first introduced in signal analysis to eliminate interference between the frequency components. Now, in the field of signal processing it is commonly known as *Wigner–Ville Distribution*. Cohen's class (CC) distribution is a technique to evaluate the energy of time-varying systems [66]. The WVD is one of the so-called '*Cohen's class*' of time frequency distributions [60]. The WVD is also applied based on empirical mode decompositions (EMDs) for the fault diagnosis of bearing [67]. Although the WVD has advantages of simplicity, excellent accuracy, effectiveness, no requirement of window function for its analysis, better resolution than STFT, and invariant to window effects but it also has drawbacks of *cross-term* interference (i.e. generation of spurious frequency not contained in the original signal). Choi–William [68] developed alternative kernels to overcome this problem, but at the cost of lower resolution and an increase in computational resources. Various smoothing techniques are suggested to retain optimum resolution by first locating the interference components, and then withdraw from the unsmoothed WVD [69]. A smooth pseudo WVD is used to monitor the condition of the gearbox by detecting the broken tooth in a spur gear [70]. WVD is also suggested to spread the energy of the frequency component by using a Gaussian window [71]. It is also used for contrasting the acoustic and vibration signals to detect the failures in gear, and compare the time–frequency feature of cracked rotor [72, 73].

5.6 Wavelet Transform (WT)

In 1982, Jean Morlet introduced the idea of fine grained time–frequency analysis approach to achieve an optimal balance between frequency resolution and time resolution for seismic wave analysis. In STFT, complex cosine and sine functions are used to map the signal from time to frequency domain, whereas WT consists of a family of elementary functions (as a function of time) that can be independently dilated and shifted, known as *wavelets*. Discrete wavelet transform (DWT) and continuous wavelet transform (CWT) are two methods to calculate the wavelet transform of a signal. In DWT, the scaling factor is chosen as a power of two and it is generally implemented through a pair of lowpass and highpass wavelet filters [74]. In CWT, the scaling factor be chosen arbitrarily or by means of convolution.

This method is more sensitive to stiffness variation as compared to WVD [73], also crack can be easily found if the unbalance increases significantly. WT gives a better time localization at high frequencies and leads to analysis with constant percentage (or relative) bandwidth, which makes WT more effective than STFT. WT has great potential for detecting abrupt changes in a signal or locate a sudden change in response from an acceleration time response It is robust and insensitive to changing working conditions. WT has been used extensively in different

fields such as mechanical engineering, transportation engineering, biomedical engineering, power engineering, robotics, earthquake, structural vibration control, image processing, and due to its advantage of noise elimination, data compression and computational efficiency [48]. Complex harmonic wavelets (typically of one-octave bandwidth) are described which are particularly useful for denoising purposes with compact in the frequency domain, but infinite in the time domain [75]. They are narrower and have the appearance of windowed sinusoids (harmonic functions). The various wavelets are used for SHM [48]. Complex wavelets have the advantage of non-sensitivity to the phasing of the event being transformed because the imaginary part of the wavelet is orthogonal to the real part (sine rather than cosine).

5.7 Cepstrum Analysis

The "cepstrum" was coined by paraphrasing the word "spectrum" along with a number of similarly derived terms [76]. The 'power cepstrum' is defined as the inverse Fourier transform of the log power spectrum or amplitude spectrum. It is widely used to identify one or more periodic structure present in the spectra, and each appears as a distinct peak corresponding to the spacing of the harmonics and sidebands in cepstrum, also for the processing of signals (e.g. seismic, underwater, or aero engine noise with ground reflections), speech analysis, and to measure time delays. This technique has an important application in machine diagnostics (e.g. gear box vibrations) to identify the modulating frequencies. Gear vibrations contain rotating frequency harmonics, meshing harmonics, which are quite complex due to overlapping families of sidebands [77]. It provides a practical system for routine prognostic monitoring by condensing the frequency domain information into interpreting form.

5.8 Hilbert–Huang Transform

In 1905, David Hilbert first introduced the $\pm\pi/2$ phase shift operator as a basic property of Hilbert transform. The Hilbert transform is a convolution between the Hilbert transformer and a function [47]. Huang et al. [67] introduced the HHT as a data analysis tool or an adaptive signal processing technique to extract the properties of stationary, non-stationary and transient signals, especially for time–frequency–energy representations. HHT is applied in two steps, *first*, the EMD i.e. a key part of HHT, will decompose the any time series data into a collection of band-limited quasi-stationary functions called intrinsic mode functions (IMF). These monocomponent functions are kind of adaptive, complete and almost orthogonal representations for the signal to be analyzed. *Second*, the Hilbert spectral analysis is applied to each IMF to derive the local energy of all the instantaneous frequency, or to obtain its amplitude and phase angle from the non-linear or non-stationary signals. HHT has been applied for vibration signal analysis in different fields like mechanical engineering, biomedical and earthquake engineering. It is used for the crack-induced motor to interpret the non-linear response [78]. It is also suggested as damage identification approach for ASCE structural health monitoring benchmark structure [79].

Although, the HHT has advantages of non-involvement of any convolution, less computational time and become a promising method to extract the features of non-linear and non-stationary signal, but it also has some shortcomings [80]. First, the EMD generates unenviable IMFs at low-frequency region, may lead to result misinterpretation. Second, the monocomponent property of obtained IMF can't be achieved due to wide frequency range. Third, the EMD can't separate the signals of low frequency components. So an improved HHT technique is in dire need to solve these shortcomings. In the improved version [81], wavelet packet transform (WPT) is used as a preprocessor to separate the analyzed signal into a family of narrow band signals.

5.9 Power Spectral Density (PSD)

Power spectral density is a powerful tool to demonstrate the strength of the variations as a function of frequency. It is used to recognize and measure the amplitude of oscillatory signals in time series data, and tells at which frequencies the variations (energy) are strong or weak which may be quite effective for further analysis. It looks like a simple time series graph which is a function of frequency rather than time. This technique consumes a small amount of processing power, and it is used for fault diagnoses of induction machines [22]. PSD is computed by FFT directly or by transforming the autocorrelation function. So the power spectral density, is defined as the FT of the autocorrelation function divided by 2π taking over a large period of time [20]. The integration of PSD function over the specific frequency range is used to find the mean square value of the random function and energy. The unit of PSD is energy per frequency (width).

6 Conclusions

Due to evolution and recent development in sensors, signal processing methods, and powerful computers, SHM is paramount for the area of research in engineering structures. This paper reviewed an overview of the various vibration measurement methods and signal processing techniques used in SHM.

The most used signal processing techniques in SHM are time series models, wavelet transform, and HHT or sometimes a combination of any two of them.

Although the large amount of work has been reported in SHM, it is restricted to small and academic problems. The monitoring of smart structures is a big challenge to detect the faults or damages from the huge amount of noisy data collected from many sensors on a periodic basis. The vibration data accumulated form big structures are often very noisy. The new methodologies for online monitoring are needed to handle noisy data effectively, and be precise, ascendable, portable, and expeditious computationally. It has been found that the contact type instruments are mostly used for vibration measurements in SHM. The use of non contact type laser based instruments will overcome the drawbacks of traditional sensors which will eliminate the need for mounting the sensor on the machine and results in quick measurement, high accuracy and non intrusiveness. From the above review, it is concluded that there is huge potential for use of non contact instruments for vibration measurement in predicting the maintenance and failure aspects of dynamic machines.

References

1. McMillan RB (2004) Rotating machinery: practical solutions to unbalance and misalignment. Fairmont Press, Lilburn
2. Tsang AH (1995) Condition-based maintenance: tools and decision making. J Qual Maint Eng 1(3):3–17
3. Meher-Homji CB (1995b) Blading vibration and failure in gas turbines part B: compressor and turbine airfoil distress. ASME paper no. 95-GT-419
4. Cao Y, Rong XL, Shao SJ, He KP (2012). Present situation and prospects of vibration sensors. In: Computer distributed control and intelligent environmental monitoring (CDCIEM), 2012 international conference on. IEEE, pp 515–518
5. Peng Z, Kessissoglou N (2003) An integrated approach to fault diagnosis of machinery using wear debris and vibration analysis. Wear 255(7):1221–1232
6. Adeli H, Jiang X (2009) Intelligent infrastructure: neural networks, wavelets, and chaos theory for intelligent transportation systems and smart structures. CRC Press, Boca Raton
7. Fritzen CP, Balageas D, Güemes A (eds) (2006) Structural health monitoring, vol 493. ISTE, London
8. Speckmann H, Roesner H (2006) Structural health monitoring: a contribution to the intelligent aircraft structure. In: Proceeding of ECNDT
9. Doebling SW, Farrar CR, Prime MB, Shevitz DW (1996) Damage identification and health monitoring of structural and mechanical systems from changes in their vibration characteristics: a literature review (No. LA–13070-MS). Los Alamos National Lab, NM
10. Castellini P, Martarelli M, Tomasini EP (2006) Laser doppler vibrometry: development of advanced solutions answering to technology's needs. Mech Syst Signal Process 20(6):1265–1285
11. Carden EP, Fanning P (2004) Vibration based condition monitoring: a review. Struct Health Monit 3(4):355–377
12. Shah BM, Cannington JC, Ferko EJ, Kwon YS, Saunders SA, Phan N, Candela JM (2004) P-3C service life management. In: Proceedings of USAF ASIP conference
13. Altintas Y, Yellowley I, Tlusty J (1988) The detection of tool breakage in milling operations. J Manuf Sci Eng 110(3):271–277
14. Rao SS (1995) Mechanical vibrations. Addison-Wesley, Boston
15. Tandon N, Parey A (2006) Condition monitoring of rotary machines. In: Wang L, Gao RX (eds) Condition monitoring and control for intelligent manufacturing. Springer, London, pp 109–136
16. Wang L, Gao RX (2006) Condition monitoring and control for intelligent manufacturing. Springer, Berlin
17. Scheffer C, Girdhar P (2004) Practical machinery vibration analysis and predictive maintenance. Elsevier, Amsterdam
18. Snr D, Dimla E (2000) Sensor signals for tool-wear monitoring in metal cutting operations—a review of methods. Int J Mach Tools Manuf 40(8):1073–1098
19. Jantunen E (2002) A summary of methods applied to tool condition monitoring in drilling. Int J Mach Tools Manuf 42(9):997–1010
20. Rao JS, Gupta K (1999) Introductory course on theory and practice of mechanical vibrations. New Age International, Seborga
21. Randall RB (2011) Vibration-based condition monitoring: industrial, aerospace and automotive applications. Wiley, London
22. Cusido J, Romeral L, Ortega JA, Rosero JA, Garcia Espinosa A (2008) Fault detection in induction machines using power spectral density in wavelet decomposition. IEEE Trans Ind Electro 55(2):633–643
23. Bolton W (2003) Mechatronics: electronic control systems in mechanical and electrical engineering. Pearson Education, Upper Saddle River
24. Terpay GW, Zipfel Jr GG (1999) Measuring blade condition in a gas turbine engine using eddy-currents. In: Ninth international conference on adaptive structures and technologies. October 14–16, 1998, Boston, CRC, p 71
25. Dowell M, Sylvester G (1999) Turbomachinery prognostics and health management via eddy current sensing: current developments. In: Aerospace conference, 1999. Proceedings 1999 IEEE, vol 3, IEEE, pp 1–9
26. Adams ML (2000) Rotating machinery vibration: from analysis to troubleshooting, vol 131. CRC Press, Boca Raton
27. Restagno F, Crassous J, Charlaix E, Monchanin M (2001) A new capacitive sensor for displacement measurement in a surface-force apparatus. Meas Sci Technol 12(1):16
28. Lawson CP, Ivey PC (2005) Tubomachinery blade vibration amplitude measurement through tip timing with capacitance tip clearance probes. Sens Actuators, A 118(1):14–24
29. Zhao-Hua W (2006) Capacitive sensor based on active bridge circuit and its measurement system. Beijing University of Chemical Technology Master Degree Thesis, 11
30. Li MG, Sun RX, Li Y (2008) Research on vibration sensor of ultra low frequency. Colliery Mech Electr Technol 3:012
31. Bruel and Kjaer (1984) Mechanical vibration and shock measurements. Bruel and Kjaer, Denmark, pp 97–120
32. Silva RG, Reuben RL, Baker KJ, Wilcox SJ (1998) Tool wear monitoring of turning operations by neural network and expert system classification of a feature set generated from multiple sensors. Mech Syst Signal Process 12(2):319–332
33. Dimla DE, Lister PM (2000) On-line metal cutting tool condition monitoring. I: force and vibration analyses. Int J Mach Tools Manuf 40(5):739–768
34. Trejo-Hernandez M, Osornio-Rios RA, Romero-Troncoso RDJ, Rodriguez-Donate C, Dominguez-Gonzalez A, Herrera-Ruiz G (2010) FPGA-based fused smart-sensor for tool-wear area quantitative estimation in CNC machine inserts. Sensors 10(4):3373–3388
35. Bouche RR (1979) Calibration of shock and vibration measuring transducers (No. SVM-11). Shock and Vibrations Information Centre, Washington
36. Fu-Cheng X (2008) Common vibration sensor and its typical application circuit. Pract Electron 10:13–15

37. Tatar K (2006) Machine tool vibrations and violin sound fields studied using laser vibrometry. Doctoral dissertation, Lulea University of Technology
38. Righini GC (ed) (2009) An introduction to optoelectronic sensors. World Scientific, Singapore
39. Stanbridge AB, Ewins DJ (1999) Modal testing using a scanning laser doppler vibrometer. Mech Syst Signal Process 13(2):255–270
40. Khan AZ, Stanbridge AB, Ewins DJ (2000) Detecting damage in vibrating structures with a scanning LDV. Opt Lasers Eng 32(6):583–592
41. Vass J, Smíd R, Randall RB, Sovka P, Cristalli C, Torcianti B (2008) Avoidance of speckle noise in laser vibrometry by the use of kurtosis ratio: application to mechanical fault diagnostics. Mech Syst Signal Process 22(3):647–671
42. Rytter A, Kirkegaard PH (1994) Vibration based inspection of civil engineering structures. Aalborg Universitetsforlag, Aalborg
43. Park G, Muntges DE, Inman DJ (2001) Self-monitoring and self-healing jointed structures. Key Eng Mater 204:75–84
44. Khemili I, Chouchane M (2005) Detection of rolling element bearing defects by adaptive filtering. Eur J Mech-A/Solids 24(2):293–303
45. Maeck J, Abdel Wahab M, Peeters B, De Roeck G, De Visscher J, De Wilde WP et al (2000) Damage identification in reinforced concrete structures by dynamic stiffness determination. Eng Struct 22(10):1339–1349
46. Friswell MI, Penny JET (1997) Is damage location using vibration measurements, practical. In: Proceedings of EUROMECH 365 international workshop: DAMAS, vol 97
47. Li CJ (2006) Signal processing in manufacturing monitoring. In: Wang L, Gao RX (eds) Condition monitoring and control for intelligent manufacturing. Springer, London, pp 245–265
48. Amezquita-Sanchez JP, Adeli H (2014) Signal processing techniques for vibration-based health monitoring of smart structures. Arch Comput Methods Eng. doi:10.1007/s11831-014-9135-7
49. Sohn H, Farrar CR (2001) Damage diagnosis using time series analysis of vibration signals. Smart Mater Struct 10(3):446
50. Liang SY, Dornfeld DA (1989) Tool wear detection using time series analysis of acoustic emission. J Manuf Sci Eng 111(3):199–205
51. Aghdam BH, Vahdati M, Sadeghi MH (2014) Vibration-based estimation of tool major flank wear in a turning process using ARMA models. Int J Adv Manuf Technol 76(9–12):1631–1642
52. Liu ZG, Cai ZJ, Tan XM (2011) Forecasting research of aero-engine rotate speed signal based on ARMA model. Proced Eng 15:115–121
53. Papoulis A, Pillai SU (2002) Probability, random variables, and stochastic processes. Tata McGraw-Hill Education, Noida
54. Dyer D, Stewart RM (1978) Detection of rolling element bearing damage by statistical vibration analysis. J Mech Des 100(2):229–235
55. Amezquita-Sanchez JP, Osornio-Rios RA, Romero-Troncoso RJ, Dominguez-Gonzalez A (2012) A hardware–software system for simulating and analyzing earthquakes applied to civil structures. Nat Hazards Earth Syst Sci 12(1):61–73
56. Lee J, Kim S (2007) Structural damage detection in the frequency domain using neural networks. J Intell Mater Syst Struct 18:785–792
57. Cheraghi N, Zou GP, Taheri F (2005) Piezoelectric-based degradation assessment of a pipe using fourier and wavelet analyses. Comput-Aided Civil Infrastruct Eng 20(5):369–382
58. Shin YS, Jeon JJ (1993) Pseudo Wigner–Ville time–frequency distribution and its application to machinery condition monitoring. Shock Vib 1(1):65–76
59. Qian S, Chen D (1996) Joint time–frequency analysis: methods and applications. Prentice Hall Inc, Englewood Cliffs
60. Cohen L (1995) Time–frequency analysis, vol 778. Prentice Hall PTR, Englewood Cliffs
61. Yinfeng D, Yingmin L, Mingkui X, Ming L (2008) Analysis of earthquake ground motions using an improved Hilbert–Huang transform. Soil Dyn Earthq Eng 28(1):7–19
62. Nagata Y, Iwasaki S, Hariyama T, Fujioka T, Obara T, Wakatake T, Abe M (2009) Binaural localization based on weighted Wiener gain improved by incremental source attenuation. IEEE Trans Audio Speech Lang Process 17(1):52–65
63. Yesilyurt I, Gursoy H (2013) Estimation of elastic and modal parameters in composites using vibration analysis. J Vib Control. doi:10.1177/1077546313486275
64. Gade S, Gram-Hansen K (1996) Non-stationary signal analysis using wavelet transform, short-time Fourier transform and Wigner–Ville distribution. Tech Rev 2, Bruel & Kjaer
65. Amezquita-Sanchez JP, Garcia-Perez A, Romero-Troncoso RJ, Osornio-Rios RA, Herrera-Ruiz G (2012) High-resolution spectral-analysis for identifying the natural modes of a truss-type structure by means of vibrations. J Vib Control. doi:10.1177/1077546312456228
66. Cohen L (1966) Generalized phase-space distribution functions. J Math Phys 7(5):781–786
67. Huang NE, Shen Z, Long SR, Wu MC, Shih HH, Zheng Q et al (1998) The empirical mode decomposition and the Hilbert spectrum for nonlinear and non-stationary time series analysis. Proc R Soc Lond Ser A: Math Phys Eng Sci 454(1971):903–995
68. Choi HI, Williams WJ (1989) Improved time–frequency representation of multicomponent signals using exponential kernels. IEEE Trans Acoust Speech Signal Process 37(6):862–871
69. Chiollaz M, Favre B (1993) Engine noise characterization with Wigner–Ville time–frequency analysis. Mech Syst Signal Process 7(5):375–400
70. Staszewski WJ, Worden K, Tomlinson GR (1997) Time–frequency analysis in gearbox fault detection using the Wigner–Ville distribution and pattern recognition. Mech Syst Signal Process 11(5):673–692
71. Claasen TACM, Mecklenbrauker WFG (1980) The Wigner distribution—a tool for time–frequency signal analysis. Part I: continuous-time signals. Philips J Res 35(3):217–250
72. Baydar N, Ball A (2001) A comparative study of acoustic and vibration signals in detection of gear failures using Wigner–Ville distribution. Mech Syst Signal Process 15(6):1091–1107
73. Zou J, Chen J (2004) A comparative study on time–frequency feature of cracked rotor by Wigner–Ville distribution and wavelet transform. J Sound Vib 276(1):1–11
74. Mallat SG (1989) A theory for multiresolution signal decomposition: the wavelet representation. IEEE Trans Pattern Anal Mach Intell 11(7):674–693
75. Newland DE (2007) Wavelet analysis of vibration signals. Wiley, London, pp 585–597
76. Bogert BP, Healy MJR, Tukey JW (1963) The quefrency alanysis of time series for echoes: cepstrum pseudo-autocovariance, cross-cepstrum and saphe cracking. In: Rosenblatt M (ed) Proceedings of the symposium on time series analysis. Wiley, New York, pp 209–243
77. Randall RB (1973) Cepstrum analysis and gearbox fault diagnosis. Bruel and Kjaer, Denmark
78. Yang B, Suh CS (2004) Interpretation of crack-induced rotor nonlinear response using instantaneous frequency. Mech Syst Signal Process 18(3):491–513
79. Yang JN, Lei Y (2000) System identification of linear structures using Hilbert transform and empirical mode decomposition. In: SPIE proceedings series. Society of photo-optical instrumentation engineers, pp 213–219
80. Peng ZK, Tse PW, Chu FL (2005) An improved Hilbert–Huang transform and its application in the vibration signal analysis. J Sound Vib 286(1):187–205
81. Dequeiroz RL, Rao KR (1993) Time-varying lapped transforms and wavelet packets. IEEE Trans Signal Process 41(12):3293–3305

View publication stats